INFOMASTER
Lamp Tester
MK 9994, MK 9995

0235659

- For max. 11 indicator lamps
- Width 22.5 mm

Circuit Diagrams

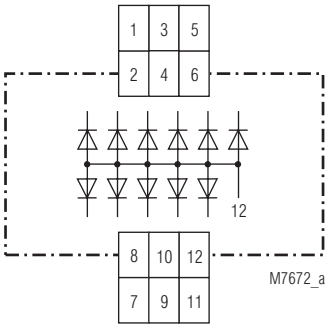

MK 9994

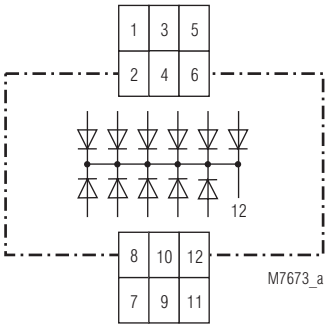

MK 9995

Approvals and Markings

CE

Application

The lamp tester contains a diode group with either common anode or cathode. It blocks one lamp from the other in order to avoid influence. On AC-operation the lamps are only half illuminated.

Standard Types

MK 9994	
Article number:	0012938
MK 9995	
Article number:	0015889
• Width:	22.5 mm

Ordering example for variants

MK 9994 /_ _
- Variant, if required
- Type

Technical Data

Nominal voltage: AC 250 V

Data of diods

Current per output:	0.6 A at 100 % ED 1 A max. 3 min.
Periodical peak reverse voltage:	1 000 V
Peak surge voltage:	1 200 V
Peak surege voltage power dissipation:	1.0 kW for 10 µs
Max. peak current:	50 A for 10 ms
Periodical peak voltage:	1 100 V

General Data

Operating mode:	Continuous operation	
Temperature range:	- 20 ... + 60°C	
Degree of protection		
Housing:	IP 40	IEC/EN 60 529
Terminals:	IP 20	IEC/EN 60 529
Housing:	Thermoplastic with V0 behaviour to UL subject 94	
Vibration resistance:	0,35 mm Amplitude, frequency 10 ... 55 Hz	IEC/EN 60 068-2-6
Climate resistance:	20 / 060 / 04	IEC/EN 60 068-1
Terminal designation:	EN 50 005	
Wire connection:	2 x 1.5 mm² solid or 2 x 1.0 mm² stranded wire with sleeve DIN 46 228-1/-2/-3/-4	
Wire fixing:	Flat terminals with self lifting clamping piece	IEC/EN 60 999-1
Mounting:	DIN rail	IEC/EN 60 715
Weight:	80 g	

Dimensions

Width x heigth x depth: 22.5 x 82 x 99 mm

All technical data in this list relate to the state at the moment of edition. We reserve the right for technical improvements and changes at any time.